AOM mount with tilt adjustment and rotation adjustment

AOM_508

Mounting examole for Crystal Technology's AOM

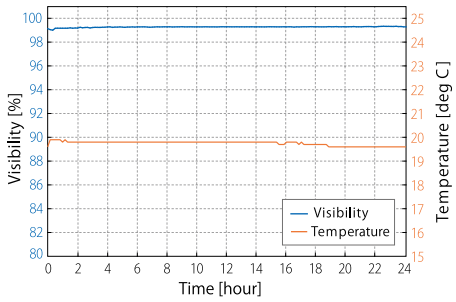

Stability data

The reference data is only attached to prototype AOM_508, not for every product.
(We do not attach data for each products as we do for MM1000S and BSM1000S)

AOM_508 is a specialized mount for AOM which has adjusting mechanism of both tilt and rotation in the horizontal plane. To simplify your beam alignment procedure, the rotation axis is designed to match the center of the AOM crystal. Ultrafine tuning is possible due to adopting of the 0.15 mm pitch screw, which has the same design scheme as MH100IH_254 mirror mount. Outstanding rigidity of the horizontal rotation is achieved by pre-pressured ball bearing. You can also use AOM_508 to mount a high performance cube beam splitter, prism and so on. Typical evaluation data show ultrastable visibility, is shown in the lower left.

AOM_508

AOM mount with tilt adjustment and rotation adjustment

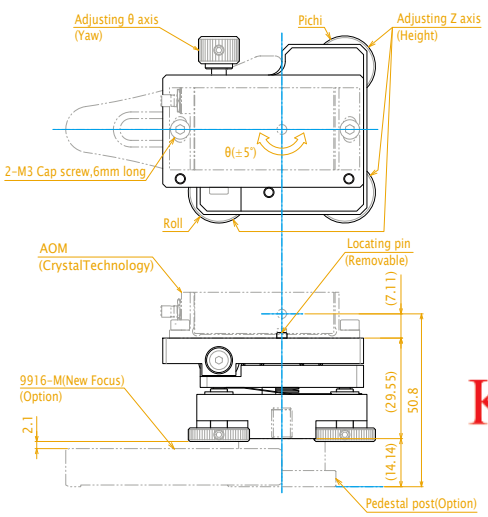

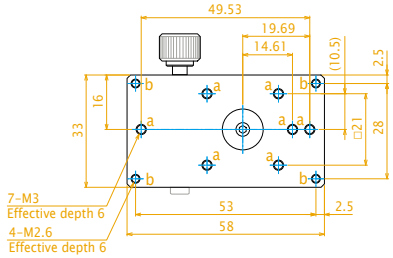

View from top without AOM

Kokyo 株式会社光響
Email : info@symphotony.com
Web : https://www.symphotony.com/

Material	Extra Super Duralumin (ESD)
Surface Finish	Anodized (color: gray, sandblasted)
Mounting Method	M6 TAP (effective depth 9)
Adjustment Screw	0.15 mm pitch screw (170TPI)
Adjustment Range	θ-axis: ±5°, Z stroke: ±1.8 mm (Pitch/Roll: ±1.8°)
Resolution θ-axis Z-axis Z-stroke	(The displacement when rotated 1°) 0.00128° (22.6 μrad) 0.0006452° (11.3 μrad) 0.000417 mm
Remarks	•Equipped with Soft-lock Mechanism. (Patent application No. 2005-312867) •Contact us about attachments for other optics.

AOM mount with rotation adjustment

AOM_θ

Installation example on our mirror mount, MH100IH_254

AOM_θ offers the function of horizontal rotation only for AOM mounting. To simplify your beam alignment procedure, the rotation axis is designed to match the center of the AOM crystal. The mechanical design is based on AOM_508.

AOM_θ

AOM mount with and rotation adjustment

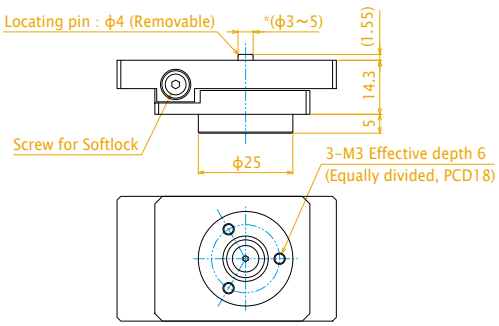

An example of mounting with heatsink keeping optical axis in 2" high